SMA 90 DEGREE HYBRID 2-18 GHZ

SH7223

SPECIFICATIONS

ELECTRICAL:

FREQUENCY: 2-18 GHZ
VSWR 1.60
POWER CW: 50 WATTS
ISOLATION: 15 DB MIN
INSERTION LOSS: 3.1 ± 1.80 DB
IMPEDANCE: 50 OHMS
PHASE BALANCE: ±8°
AMPLITUDE BALANCE: ±0.7 DB

MATERIALS:

CONNECTORS: PASSIVATED STAINLESS STEEL
CONTACTS: BeCu
CONTACT PLATING: Au PER MIL-G-45204

ENVIRONMENTAL:

TEMP: -55° C TO +85° C

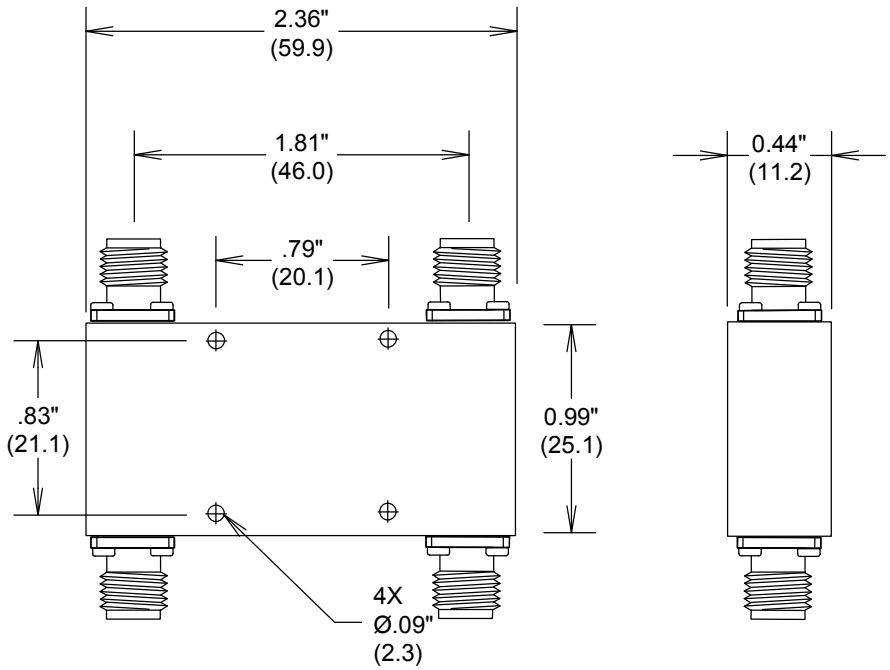

MEASUREMENTS BELOW ARE TYPICAL

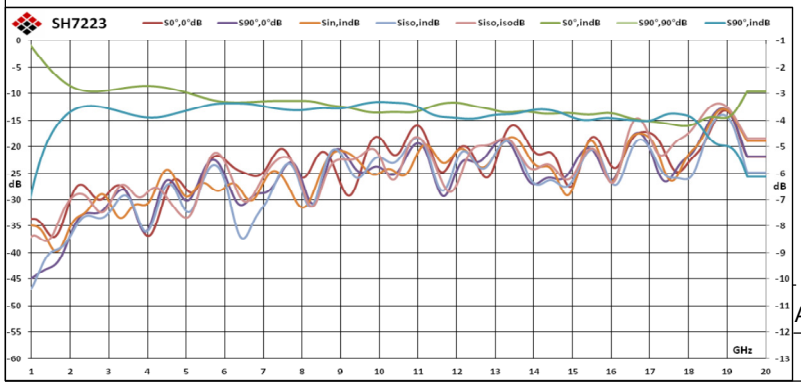

ALL DIMENSIONS IN inches(MM) Typical

FAIRVIEW MICROWAVE INC.
ALLEN, TX 75013 WWW.FAIRVIEWMICROWAVE.COM

TITLE

SMA 90 DEGREE HYBRID 2-18 GHZ

SIZE	CAGE CODE	DWG NO	REV
A	3FKR5	SH7223	A
SCALE		SHEET	